CP-series

60Hz

Close-coupled Centrifugal Pumps

EVERGUSH®

CP-Series
Standard type
Cast iron pump

CPS-Series
Stainless steel pump
(SUS304 or SUS316)

Operating Conditions

1. Ambient temperature: Max.40°C.
2. Liquid temperature: 0~60°C.
3. For clean water without solid abrasives.
   No flammable or corrosive liquids.
4. Working pressure: Max. 10 bar.

Applications

1. Heating and cooling water circulation.
2. Broad range of industrial applications.
3. Open loop and close loop water circuit systems.
4. Water supply and pressure boosting systems.
5. Process water for paper mill, brewery, refinery.
6. Boiler feed, washing and cleaning system.
7. Water supply and disposal for households.
8. Water circulation for cooling tower, air-condition facilities.

Features

1. The motor and pump are connected with the same shaft, for eliminating fluctuation and reducing installation and maintenance cost.
2. Special volute channel design for silent operation and high efficiency.
3. Compact & robust structure for saving space and easy installation.

Strong One-piece formed impeller

Bronze close type impeller
for CP-series

SUS close type impeller
for CPS-series

Model Code

CP 80 - 2 2.2 A

- A — Single phase motor
- 2.2 — Output (kw)
- 2 — Pole(P)
- 80 — Inlet/Outlet diameter(mm)
- CP — Pump Series
  - CP-Cast iron pump
  - CPS-Stainless Steel pump

Motor Spec.

1. Voltage: Single phase 110~220 V(0.5~2HP)
   Three phase 220~660V
2. Frequency:60HZ
3. Enclosed class: IP54
4. Insulation: E,B,F
5. Enclosed Fan cooled, 2 or 4 Pole motor.

Structure & Material

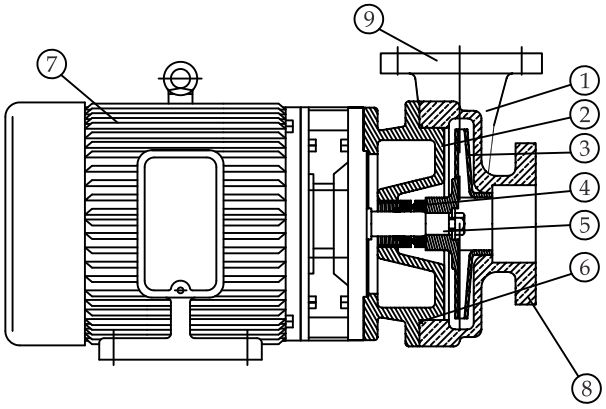

Part name	Standard Material	Substitute Material
1. Pump casing	FC200	SUS304/SUS316
2. Back cover	FC200	SUS304/SUS316
3. Impeller	Bronze	SUS304/SUS316
4. Mechanical seal	CA/CE	SIC/SIC
5. Main shaft	SUS420	SUS304
6. O-ring	NBR	TEFLON
7. Motor casing	FC200	-----
8. Inlet flange	FC200	SUS304
9. Outlet flange	FC200	SUS304

Copyright©Asia Automatic Pump Co.,Ltd.All rights reserved. ED2111

Close-coupled Centrifugal Pumps

EVERGUSH®

Specifications

Performance Table 3PHASE/2P/3450rpm/60Hz																	
Power: HP ; Inlet/Outlet: Inch ; Head: M ; Flow Rate: L/min																	
Model	HP	In/Out	10M	15M	20M	25M	30M	35M	40M	45M	50M	55M	60M	65M	70M	75M	80M
CP25-2.4	½	1"X1"	110	60	20												
CP40-2.75	1	1½"X1½"	230	160	90												
CP40-21.5	2	1½"X1½"	325	280	155												
CP50-21.5	2	2"X2"	395	355	230												
CP50-22.2	3	2"X2"	370	340	310	295	220	130									
CP65-22.2	3	2½"X2½"	650	500	320												
CP80-22.2	3	3"X3"	685	510	380												
CP50-23.7	5	2"X2"		400	360	330	300	270	140								
CP65-23.7	5	2½"X2½"	600	500	400												
CP80-23.7	5	3"X3"	800	650	500												
CP50-25.5	7.5	2"X2"		480	470	450	430	410	380	300	150						
CP80-25.5	7.5	3"X3"	1050	950	860	750	600	450									
CP100-25.5	7.5	4"X4"	1280	1080	880	470											
CP50-27.5	10	2"X2"	490	475	455	440	430	425	420	380	380	330	280	150			
CP80-27.5	10	3"X3"	1100	900	880	770	700	540	520	500	460	400	280	180			
CP100-27.5	10	4"X4"	1500	1300	1200	980	750										
CP80-211	15	3"X3"	780	750	735	725	700	685	670	650	620	570	520	450	430	250	
CP100-211	15	4"X4"	1650	1600	1500	1280	980	650									
CP80-215	20	3"X3"	800	780	760	745	735	720	700	690	680	640	620	580	560	480	310
CP100-215	20	4"X4"	1800	1780	1760	1680	1600	1380	1000								
CP125-215	20	5"X5"	3300	3000	2700	2300	1900	1350									
CP100-218	25	4"X4"	1350	1250	1200	1180	1160	1130	1100	1080	1060	1020	970	800	580		
CP150-218	25	6"X6"	4020	3750	3100	2360	1000										
CP100-222	30	4"X4"	1870	1850	1840	1790	1780	1730	1690	1600	1520	1250	1080	750			
CP125-222	30	5"X5"	2700	2670	2630	2600	2570	2380	2250	1700	1280	850					
CP100-230	40	4"X4"	1450	1390	1350	1320	1290	1280	1265	1235	1215	1200	1180	1160	1120	1070	
CP125-230	40	5"X5"	2600	2550	2500	2470	2450	2420	2410	2300	2190	1830	1465				
CP150-230	40	6"X6"	4970	4900	4850	4650	4125	3700	3180	2470							
Performance Table 1PHASE/2P/3450rpm/60Hz																	
CP25-2.4A	½	1"X1"	110	58	20												
CP40-2.75A	1	1½"X1½"	230	160	90												
CP40-21.5A	2	1½"X1½"	325	280	155												
CP50-21.5A	2	2"X2"	395	355	230												
CP50-22.2A	3	2"X2"	370	340	310	295	220	130									
CP65-22.2A	3	2½"X2½"	650	500													
CP80-22.2A	3	3"X3"	685	510	380												
Performance Table Customized Pump																	
Model	HP	In/Out	10M	15M	20M	25M	30M	35M	40M	45M	50M	55M	60M	65M	70M	75M	80M

- CP is standard model, cast iron pump.
- CPS is stainless steel pump. It's optional.

Copyright©Asia Automatic Pump Co.,Ltd.All rights reserved. ED2111

Close-coupled Centrifugal Pumps

EVERGUSH®

Specifications

Performance Table 3PHASE/4P/1750rpm/60Hz											
Power: HP ; Inlet/Outlet: Inch ; Head: M ; Flow Rate: L/min											
Model	HP	In/Out	5M	10M	15M	20M	25M	30M	35M	40M	45M
CP50-41.5	2	2"X2"	650	480	300						
CP65-42.2	3	2½"X2½"	855	730	500						
CP80-43.7	5	3"X3"	1210	1060	850						
CP100-45.5	7.5	4"X4"	1550	1350	1100	750	500				
CP100-47.5	10	4"X4"	2200	1980	1550	1200	650				
CP125-47.5	10	5"X5"	2700	2000	1050						
CP100-411	15	4"X4"	2300	2200	2150	1600	1100				
CP125-411	15	5"X5"	2400	2300	2200	1750	1200				
CP150-411	15	6"X6"	3500	3250	2800	1400					
CP100-415	20	4"X4"	2800	2600	2400	1900	1500	600			
CP125-415	20	5"X5"	3800	3600	3200	2500	1800				
CP150-415	20	6"X6"	4000	3800	3400	2700	2100				
CP125-418	25	5"X5"	4500	4200	3780	3180	2600	1500			
CP150-418	25	6"X6"	4150	4000	3800	3200	2700				
CP200-418	25	8"X8"	6300	5200	3600						
CP150-422	30	6"X6"	4250	4000	3900	3500	3000	2300			
CP200-422	30	8"X8"	6600	5400	4300	4000	3350				
CP150-430	40	6"X6"	4350	4000	3950	3800	3700	3300	2450	2100	
CP200-430	40	8"X8"	7800	7200	6500	5800	4900	3500			
CP200-437	50	8"X8"	8000	7700	7200	6500	5300	3650			
CP150-445	60	6"X6"	6600	6550	6460	6370	5830	5120	4130	3250	
CP200-445	60	8"X8"	9200	9150	8830	8350	7000	4950			
CP250-445	60	10"X10"	11000	10500	8800	7000	5350				
CP200-455	75	8"X8"	9700	9550	9300	8750	7400	5550			
CP250-455	75	10"X10"	11300	10800	10300	10200	9350	8680	6050		
CP250-475	100	10"X10"			11560	11320	11280	10640	8670	6660	3430
CP250-490	125	10"X10"					14670	13600	12100	11100	
CP250-4110	150	10"X10"						15700	13700	12600	11200

Performance Table Customized Pump											
Model	HP	In/Out	5M	10M	15M	20M	25M	30M	35M	40M	45M

●CP is standard model, cast iron pump. ●CPS is stainless steel pump. It's optional.

1	Power:	HP	7	Liquid type:	
2	Voltage:	v	8	Liquid Temperature:	°C
3	Frequency:	Hz	9	Liquid Density:	
4	Pole:	P	10	Liquid Viscosity :	
5	Rated Head:	M	11	PH Value:	PH
6	Rated Flow:	LPM			

Special specifications can be customized according to customer needs, please fill in the form above.

Customized Product

CPS pump with VFD motor

OPEN type Impeller

Copyright©Asia Automatic Pump Co.,Ltd.All rights reserved. ED2111

Close-coupled Centrifugal Pumps

EVERGUSH

Dimensions

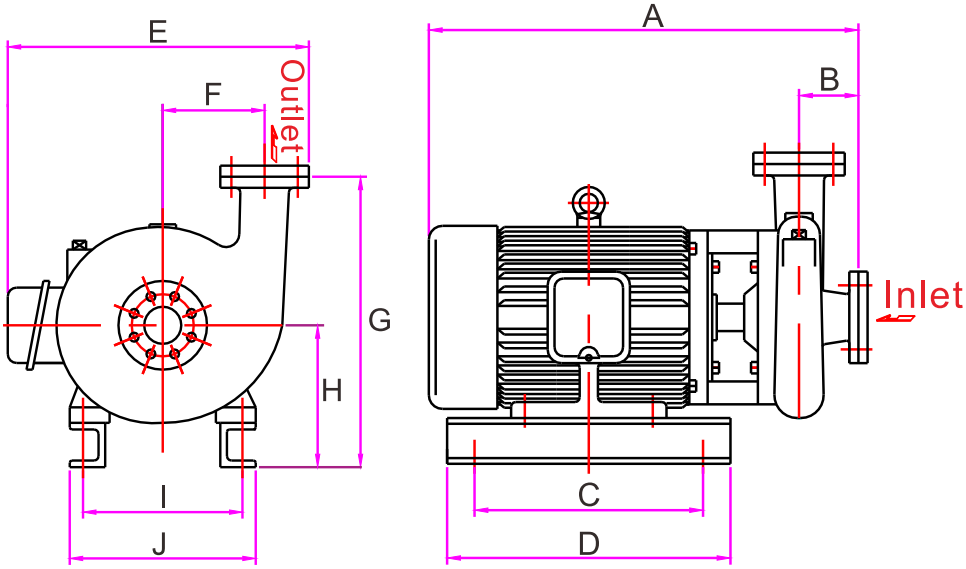

2P/3Phase Model-Dimension & Weight

Model	A	B	C	D	E	F	G	H	I	J	Weight
CP25-2.4	335	45	205	230	243	65	181	86	112	146	20kg
CP40-2.75	348	45	205	230	264	70	220	95	125	160	25kg
CP40-21.5	408	62	238	260	306	82	242	105	140	175	36kg
CP50-21.5	408	62	238	260	306	82	242	105	140	175	36kg
CP50-22.2	395	49	238	260	319	95	265	115	140	175	43kg
CP65-22.2	411	59	238	260	319	80	265	105	140	175	43kg
CP80-22.2	411	59	238	260	319	80	265	105	140	175	43kg
CP50-23.7	481	74	265	300	355	100	297	142	190	240	68kg
CP65-23.7	481	76	265	300	355	100	297	142	190	240	68kg
CP80-23.7	481	76	265	300	355	100	297	142	190	240	68kg
CP50-25.5	540	81	265	300	418	88	318	158	216	266	90kg
CP80-25.5	523	73	265	300	388	100	320	162	216	266	90kg
CP100-25.5	538	81	265	300	419	110	328	158	216	266	97kg
CP50-27.5	559	81	265	300	429	120	327	162	216	266	108kg
CP80-27.5	559	81	265	300	429	120	327	162	216	266	108kg
CP100-27.5	538	81	265	300	419	110	328	158	216	266	112kg
CP80-211	676	81	350	400	508	140	410	230	254	308	150kg
CP100-211	720	100	350	400	475	129	405	230	254	308	157kg
CP80-215	676	81	350	400	508	140	410	230	254	308	170kg
CP100-215	720	100	350	400	475	129	405	230	254	308	170kg
CP125-215	720	95	350	400	502	137	450	230	254	308	178kg
CP100-218	821	117	450	500	535	180	463	235	254	300	220kg
CP150-218	845	140	500	550	672	225	538	280	279	334	286kg
CP100-222	830	100	450	500	595	160	500	280	279	352	257kg
CP125-222	845	140	500	550	672	225	538	280	279	334	325kg
CP100-230	795	100	450	500	590	160	500	280	318	325	295kg
CP125-230	840	150	450	500	600	170	520	280	318	325	295kg
CP150-230	898	155	500	550	670	230	533	281	279	334	410kg

4P/3Phase Model-Dimension & Weight

Model	A	B	C	D	E	F	G	H	I	J	Weight
CP50-41.5	425	68	170	220	380	150	320	165	140	175	51kg
CP65-42.2	447	64.5	250	300	415	150	320	170	160	205	59kg
CP80-43.7	448	81	250	300	423	140	362	182	190	235	87kg
CP100-45.5	579	104	250	300	473	155	425	202	216	260	115kg
CP100-47.5	617	104	250	300	473	155	425	202	216	260	128kg
CP125-47.5	635	95	250	300	480	137	425	202	216	259	128kg
CP100-411	696	97	350	400	555	155	458	230	254	308	185kg
CP125-411	696	97	350	400	555	155	458	230	254	308	185kg
CP150-411	775	121	350	400	560	173	470	230	254	308	190kg
CP100-415	765	100	350	400	550	160	450	230	254	308	215kg
CP125-415	775	121	350	400	588	173	470	230	254	308	220kg
CP150-415	775	121	350	400	588	173	470	230	254	308	220kg
CP125-418	818	140	460	500	679	206	560	280	279	327	288kg
CP150-418	818	104	460	500	709	236	521	280	279	327	288kg
CP200-418	827	140	460	500	697	206	560	280	279	327	293kg
CP150-422	782	104	460	500	709	236	521	280	279	327	300kg
CP200-422	890	135	460	500	690	220	580	280	279	327	333kg
CP150-430	913	104	460	500	715	236	521	280	279	327	345kg
CP200-430	937	135	460	500	691	220	580	280	279	327	369kg
CP200-437	970	150	600	650	700	253	622	302	318	400	445kg
CP150-445	963	135	650	700	757	253	600	300	356	450	455kg
CP200-445	1071	150	540	600	800	253	645	325	356	450	460kg
CP250-445	1050	175	500	550	835	274	790	400	500	620	490kg
CP200-455	1040	150	650	700	700	253	647	327	356	450	580kg
CP250-455	1125	175	490	550	984	274	790	400	500	620	610kg
CP250-475	1200	175	760	810	984	274	790	400	500	620	850kg
CP250-490	1200	175	780	900	920	274	772	382	500	620	920kg
CP250-4110	1275	175	830	950	920	274	772	382	500	620	1150kg

CP 80 - 2 2.2 A

- A — Single phase motor
- 2.2 — Output (kw)
- 2 — Pole(P)
- 80 — Inlet/Outlet diameter(mm)
- CP — Pump Series
  - CP-Cast iron pump
  - CPS-Stainless Steel pump

2P/1Phase Model-Dimension & Weight

Model	A	B	C	D	E	F	G	H	I	J	Weight
CP25-2.4A	380	66	205	230	230	65	210	100	125	162	20kg
CP40-2.75A	425	50	205	230	230	82	236	96	140	175	25kg
CP40-21.5A	440	60	240	260	260	84	261	125	160	190	36kg
CP50-21.5A	440	60	240	260	260	84	261	125	160	190	36kg
CP50-22.2A	460	61	240	260	260	76	280	125	192	228	43kg
CP65-22.2A	460	61	240	260	260	76	280	125	192	228	43kg
CP80-22.2A	460	61	240	260	260	76	280	125	192	228	43kg

Copyright©Asia Automatic Pump Co.,Ltd.All rights reserved. ED2111

Close-coupled Centrifugal Pumps

MAIN APPLICATIONS

1.Actual applications of EVERGUSH CP pumps~Water circulation for Cooling Tower(air-condition systems)

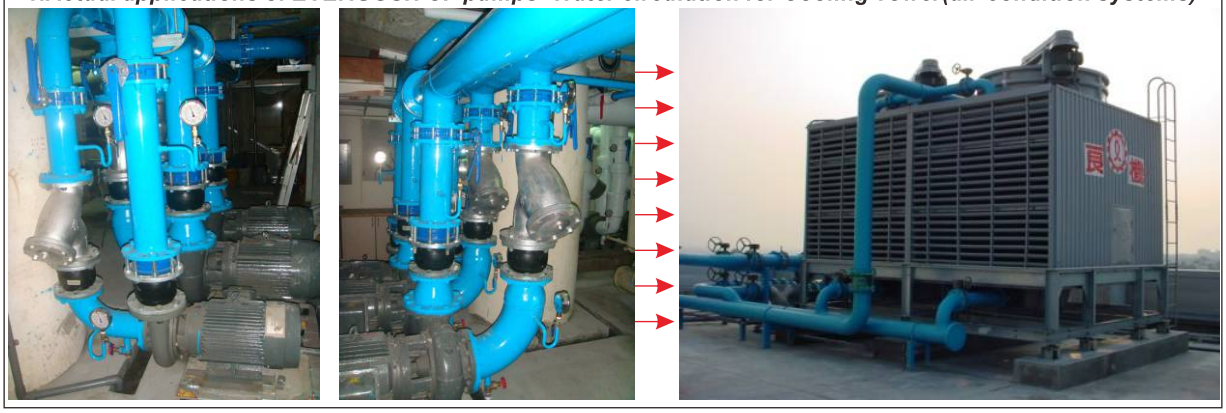

2.Actual applications of EVERGUSH CP pumps~Water circulation for chiller(air-condition systems)

3.Actual applications of EVERGUSH CP pumps~Water supply for spa equipment

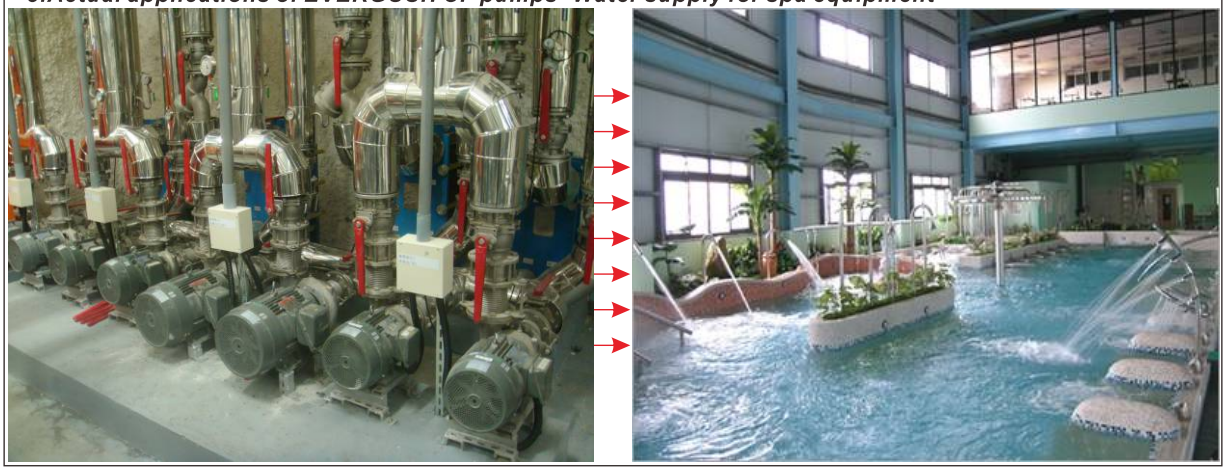

4.Actual applications of EVERGUSH CP pumps~Water circulation for swimming pool

Copyright©Asia Automatic Pump Co.,Ltd.All rights reserved. ED2111

Close-coupled Centrifugal Pumps

EVERGUSH®

MAIN APPLICATIONS

Transfer water to roof reservoir of the building

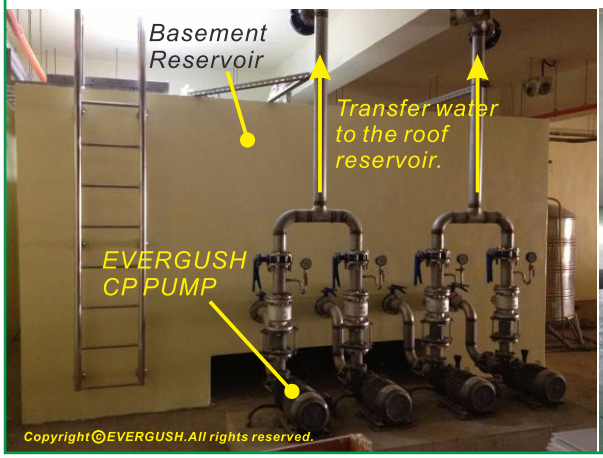

Hot water transfer or circulation for hot water system of building

Water transfer and circulation for fountain or landscaping.

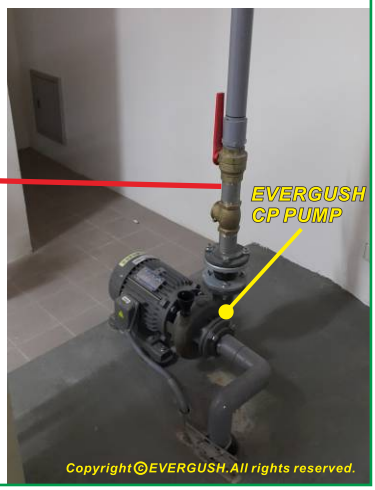

EVERGUSH UP-series Pump set is installed in the top floor of the building, connecting inlet pipes with water storage tank.The pump system auto-boost constant water pressure downward the whole building.

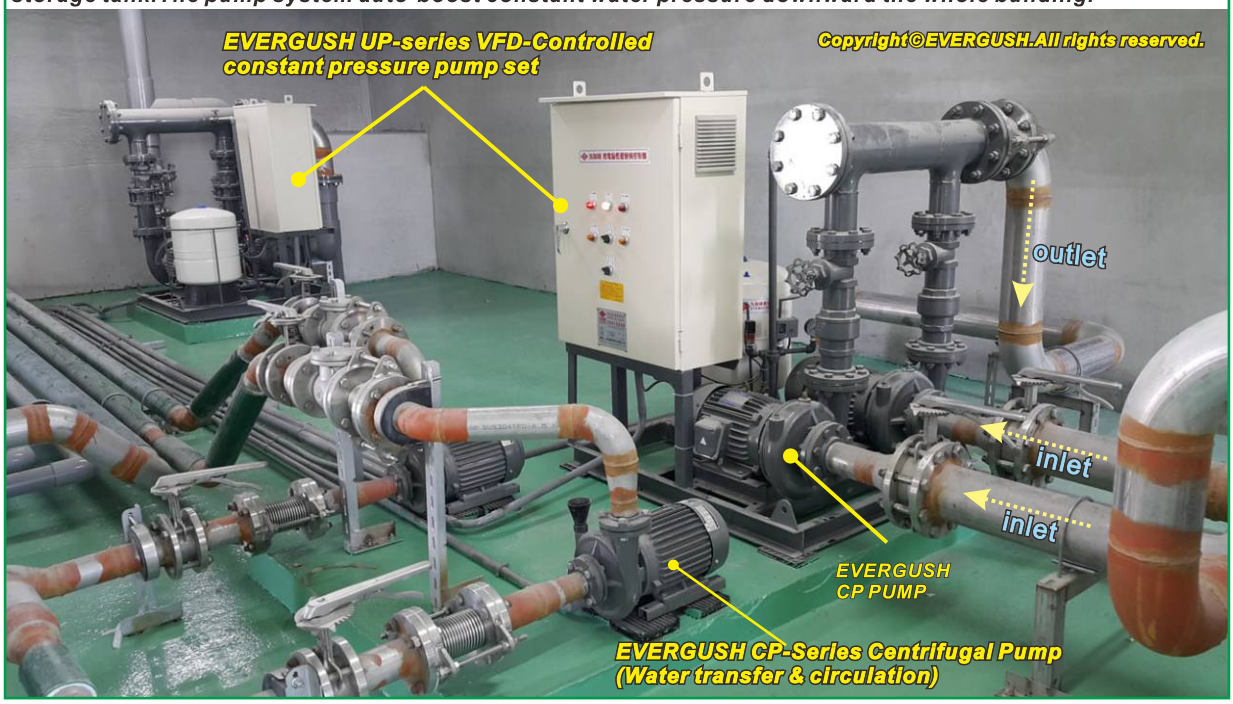

Copyright©Asia Automatic Pump Co.,Ltd.All rights reserved. ED2111